NEC

Portable Projector

NP01CM Ceiling Mount Unit

Installation and Adjustment Manual

Thank you for your purchase of the NEC Portable projector ceiling mount unit.
Please read this installation and adjustment manual carefully to ensure proper use.

• This ceiling mount unit is for use with the NP2000/NP1000. (Jan 2006)

Special skills are required for the installation of the Portable projector. This work should never be performed by the customer.

To the Dealer and the Installer

For the safety of the customer, we ask that the installation work be started after careful attention is paid to the strength of the mounting location to be sure it will withstand the weight of the Portable projector and mounting hardware.

CONTENTS

Heed the Following 2
Preparation 4
- List of Packaged Parts 4
- Names of the Parts 4
- Dimensions 5

Guide to Screen Size and Projector Mounting Position 6
- Using the Diagrams 6
- Screen Size Conversion Table(4:3) 7
- Screen Size and Projection Distance 8

Mounting the Projector 9
Adjustment of the Projection Angle 12
Specifications 14

NEC Viewtechnology, Ltd.

PRINTED WITH SOY INK™ Printed on recycled paper.

Printed in Japan
NP01CM-0601K-1

Heed the Following

This symbol alerts the user that important information concerning the operation and maintenance of this unit has been provided. The information should be read carefully to avoid problems.

⚠ WARNING

- When installing the projector, be sure to do so as explained in this manual. The projector may fall and cause injury if it is installed improperly.

- To prevent the projector from falling, install it in a place and fasten it in a way with sufficient strength to support the combined weight (9.2kg) of the projector (7.3kg) and the ceiling mount unit (1.9kg) for an extended period of time as well as to withstand earthquakes. Insufficient strength or fastening may result in the projector falling and causing injury.

- To ensure safety, be sure to tighten the bolts and screws securely. Also be sure to use the included brackets and other metal fittings. Failure to do so may result in the projectre falling and causing injury.

- When sliding the opening of the mounting adapter over the pin of the ceiling attachment unit, check that the pin of the ceiling attachment unit is fully seated in the opening. If not, the projector may fall and cause injury.

- Do not modify any parts. Doing so may result in the projector falling and causing injury.

- Do not use broken parts. Doing so may result in the projector falling and causing injury. If a part should be broken, consult your dealer.

- Do not look into the lens when the projector is turned on. Doing so could damage your eyesight.

- Make adjustments as described in this manual.
  Incorrect adjustments may result in the projector falling and causing injury.

⚠ CAUTION

- Do not obstruct the projector's ventilation holes. Doing so will prevent the dissipation of heat and may result in fires. In particular, do not use the projector in the following ways:
  Do not install the projector in a wall or in a tight place where ventilation is poor, place a cover it, etc.

- Do not install the projector in front of the outlets of an air conditioner or heater or in a place where vibrations are strong.
  Doing so may result in fires.

- Do not install the projector in humid or dusty places or exposed to smoke or steam (such as near cooking equipment or humidifiers). Doing so may result in fires.

- When installig the projector, leave sufficient space between it and surrounding objects. Failure to leave sufficient space will prevent the dissipation of heat and may result in fires.

- When removing the screws on left and right on the mounting adapter, be sure to support the projector while doing so. Failing to do so may result in the projector swinging back abruptly and causing injury.

- for PLUGGABLE EQUIPMENT, the socket-outlet shall be installed near the equipment and shall be easily accessible.

Installation Precautions

- Special techniques are required for the installation work of the projector and installation work should only be undertaken by qualified and licenced installers.

- NEC Viewtechnology will not accept any responsibility related to any accidents or incidents due to insufficient or inferior mounting techniques.

Installation Location

Avoid places of high temperature or low temperature.
(For ambient operating temperature, see the user's manual included with the projector.)
Avoid places exposed to direct sunlight and the vicinity of ventilation holes of room air conditioning and heating.

Avoid rooms with a lot of dust, humidity, greasy smoke, or tobacco smoke.
Dirt will adhere to optical parts such as lenses and mirrors and this will cause a deterioration of image quality.

Avoid places in which the screen is exposed to direct sunlight or illumination light.
When surrounding light directly hits the screen, the image appears washed out and is difficult to view.

Preparation

■ List of Packaged Parts

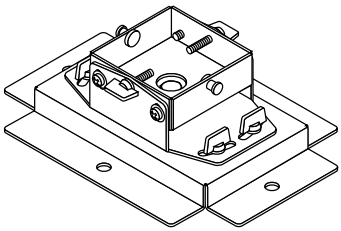

Fixed ceiling part ...1

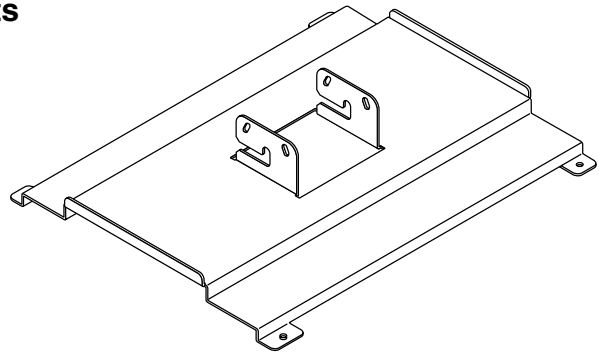

Projector mounting adapter ...1

Projector mounting screws (M4...4)

Up-down angle adjustment screws (M5 ...4)

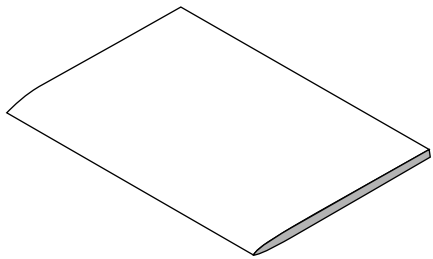

Installation and adjustment manual 1

■ Names of the Parts

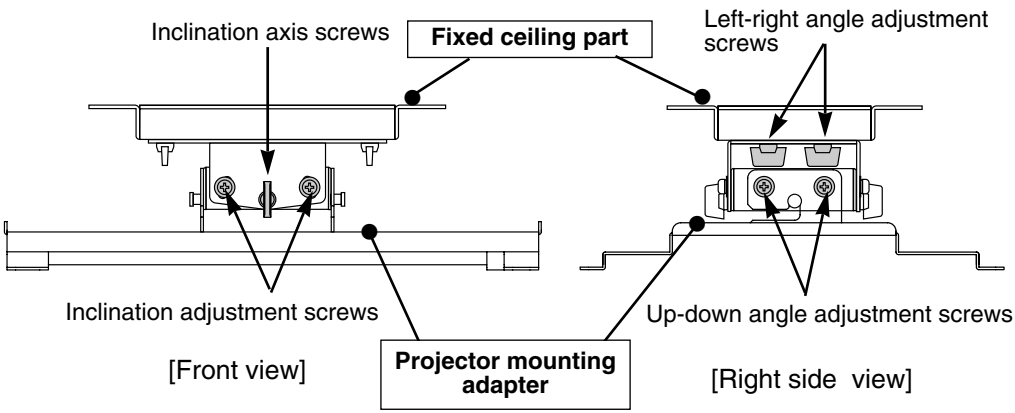

■ Dimensions

Fixed Ceiling Part and Lens Center Dimensions Diagram

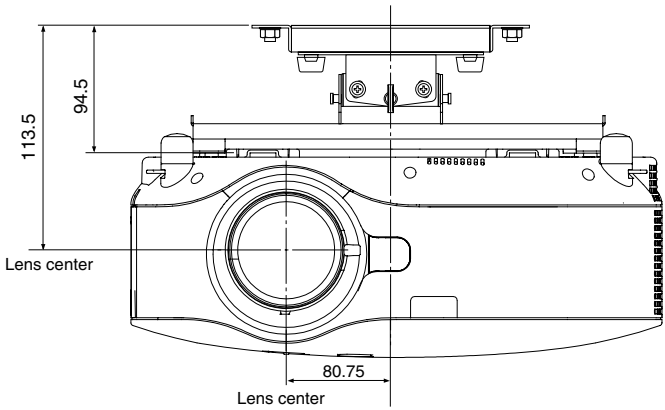

Fixed Ceiling Part Bolt Hole Position Dimensions

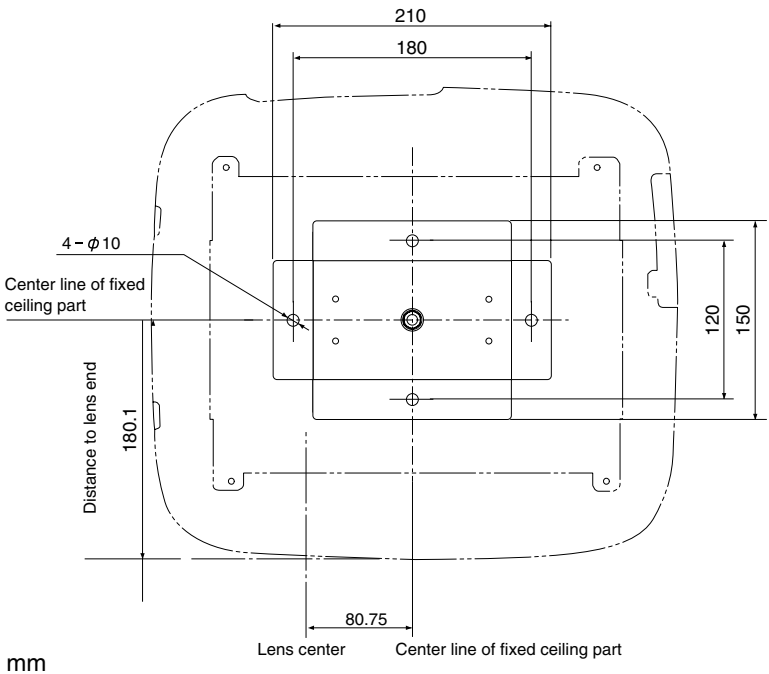

Unit: mm

Guide to Screen Size and Projector Mounting Position

Use this guide when considering the distance to the screen and the screen size.

- The ceiling mount unit can be adjusted up and down a maximum of +/-10˚, but if too much of an angle is taken the image will show some distortion. Therefore, it is recommended that an adjustment is made in conjunction with the screen projection angle.
- Available screen sizes for the projector are from 40 inches to 300 inches. (The screen size is the diagonal dimension.)
- The screen sizes and projection distances correspond to a projector screen type setting of 4:3.
- On projectors equipped with 3D reform functions, if the projector is in a position at which the optical axis is not lined up with the center of the screen, the image can be adjusted electrically and projected as a rectangle.

  Pay attention to the following points when using the 3D Reform function:
  - Check that the position of projector installation is within the range for which correction is possible with the 3D Reform function.
  - The projection distance must be set longer than indicated on the diagram on page 8.
  - In some cases, the picture quality may not be as good as normal when using the 3D reform function.

■ Using the Diagrams

Screen Size: A 100-inch screen, for example, will be 80 inches wide and 60 inches high according to Screen Size Conversion Table (4:3).

Projection Distance: A 100-inch screen will have a projection distance of approximately 3.1 m to 4.1 m according to the upper Screen Size and Projection Distance diagram on Page 8.

According to the lower diagram, the distance from lens center to the lower edge of the projection screen (with the motorized zoom at the wide angle side) will be approximately 1.5 m , and 159 mm would be added to this when the distance is from the ceiling mount surface.

■ Screen Size Conversion Table (4:3)

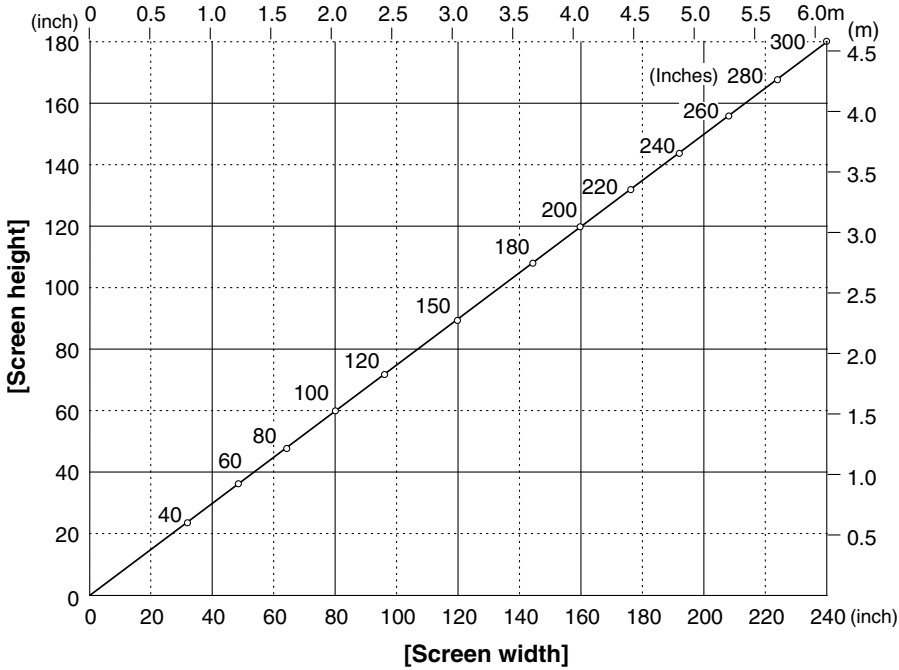

■ Screen Size and Projection Distance

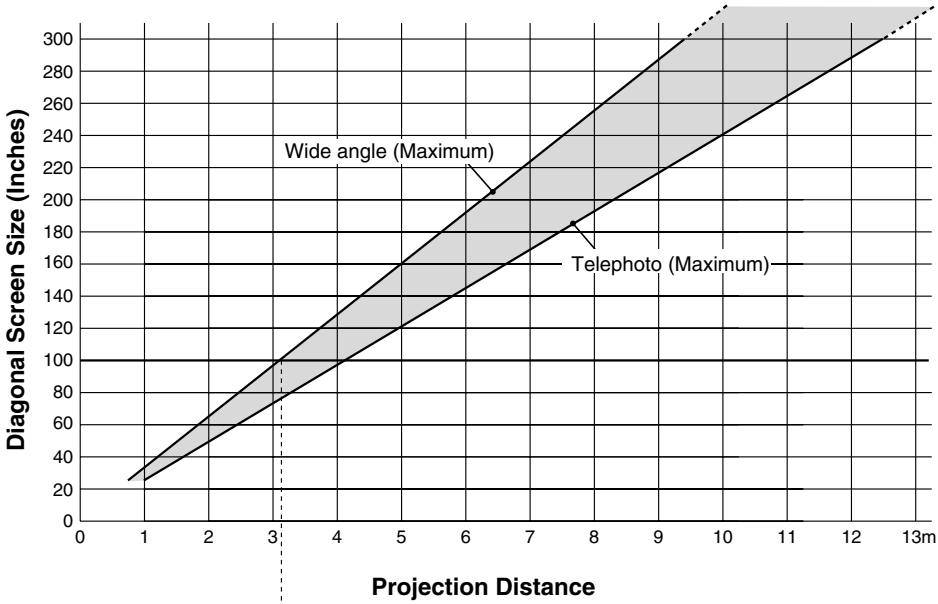

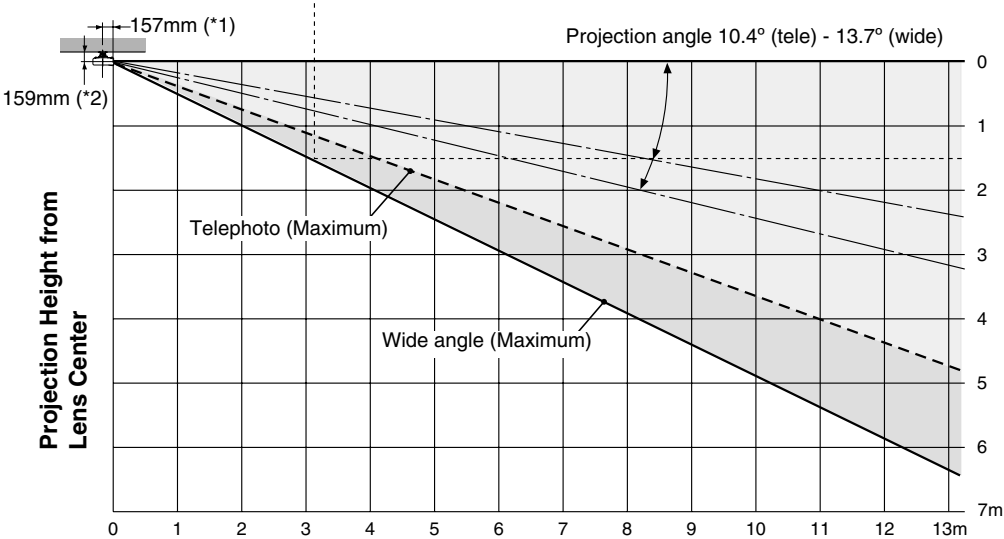

(*1) Distance from center of fixed ceiling part to end of main unit lens.

(*2) Distance of lens center (with lens shift of 0) from ceiling mount surface of fixed ceiling part.

* The above projection angle is for 100" screen.

* The projection distance is a calculated value and as such, there is a tolerance of +-5%.

Mounting the Projector

1 Attach the Fixed Ceiling Part to the Ceiling

First, partially tighten the four nuts, then tighten the nuts firmly after positioning.

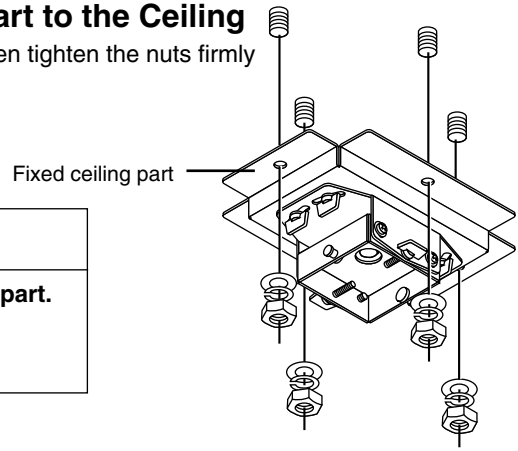

⚠ WARNING!

Use M8 bolts for the fixed ceiling part. Use of types other than M8 could cause the projector to fall.

2 Attach the Projector Mounting Adapter to the Projector

Align the holes of the projector mounting adapter with the holes at the bottom surface of the projector, then securely tighten the four supplied (M4) screws.

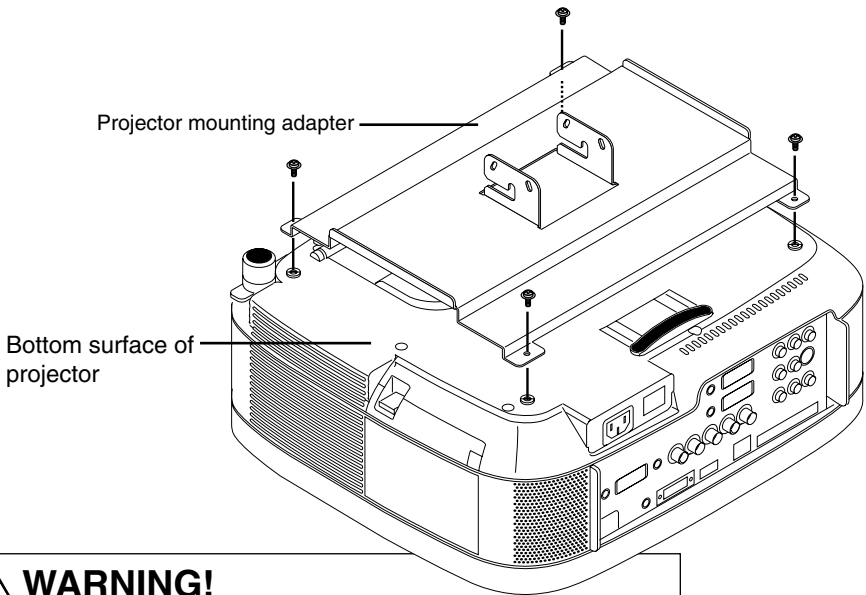

⚠ WARNING!

The use of screws other than those supplied for mounting purposes may cause the projector to be damaged or fall and cause injury. Please be sure to use the supplied screws.

3 Suspend the Projector from the Fixed Ceiling Part

Slide the slotted part of the projector mounting adapter over the pin of the fixed ceiling part and push all the way to the back.
The projector is temporarily suspended in this condition and attention must be paid so that the unit does not fall since it is not fixed in place.

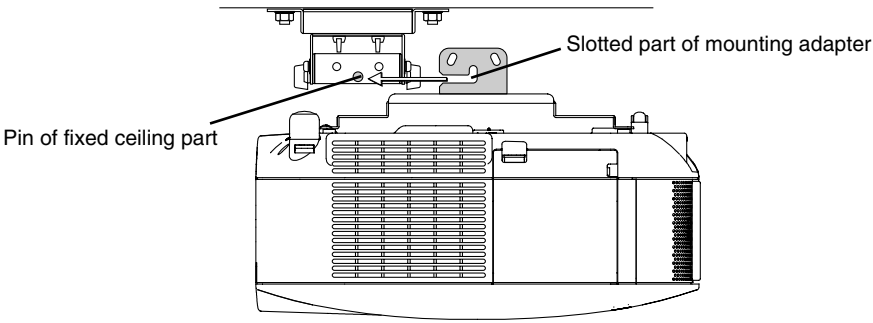

4 Temporarily Fasten the Projector Mounting Adapter

Temporarily fasten by partially tightening the four supplied (M5) screws.
Tighten firmly after completing the screen projection angle adjustment.

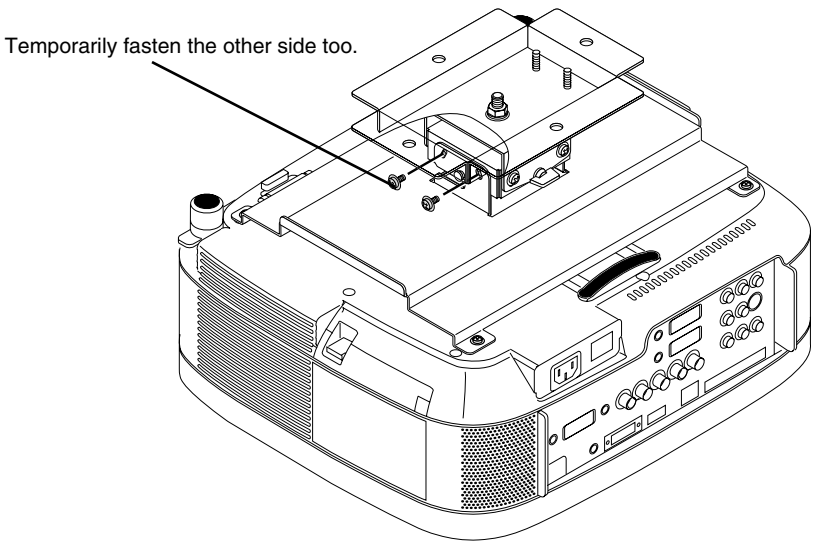

Installation Examples

When the Ceiling is Wood Construction:

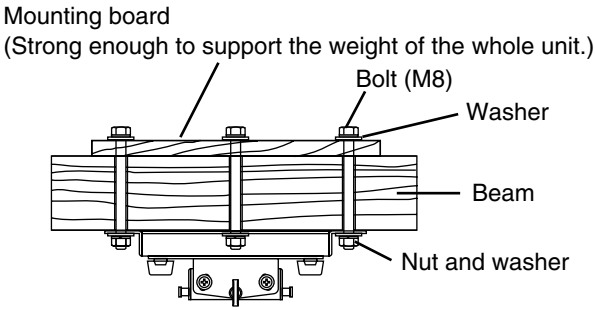

When the Ceiling is Concrete Construction:

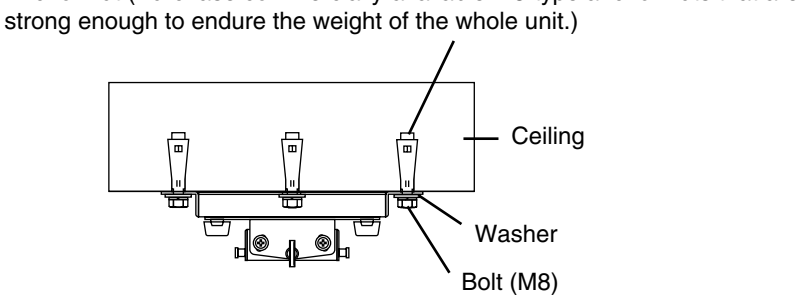

NOTE : Mounting boards, M8-type anchor nuts, bolts, nuts and washers are commercially available.

Adjustment of the Projection Angle

Before the Adjustment

- **Refer to the user's manual of the projector, switch on the power and project an image.**
- **From the Advanced Menu, select "Projector Options"→ "Setup" →"Page 1" → "Orientation". Select "Ceiling/Front" when projection is from the front side, and "Ceiling/Rear" when projection is from the rear side.**
- **Provisionally determine the projection size with the motorized zoom, then perform the angle adjustment.**

1 Adjust the Left-Right Angle

Adjust so that the left-right image is projected to the center of the screen, then securely tighten the four left-right angle adjustment screws.

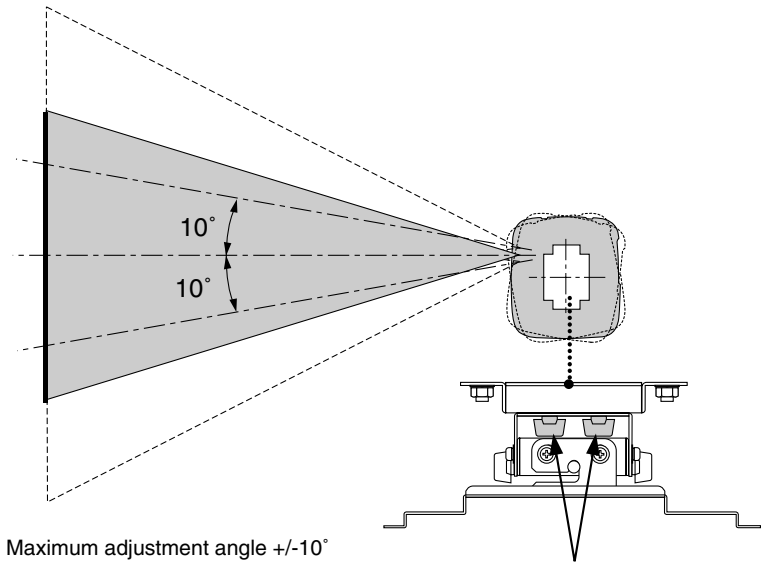

2 Adjust the Up-Down Angle

Adjust so that the north-south image is projected to the center of the screen, then securely tighten the four up-down angle adjustment screws.

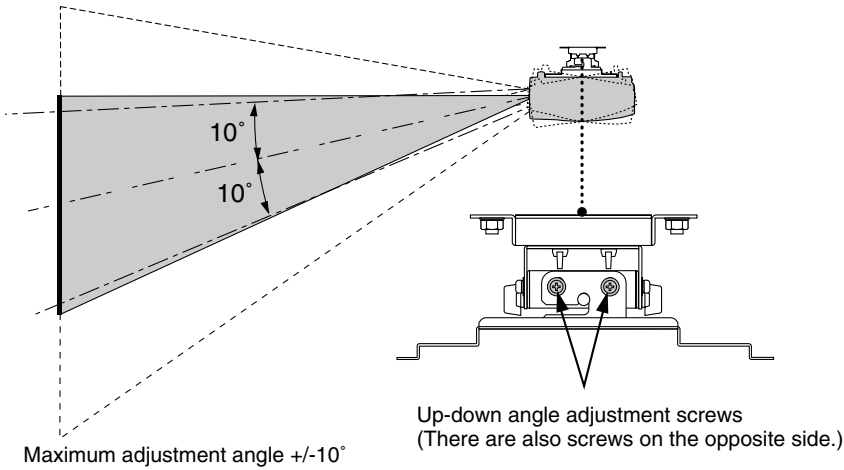

3 Adjust the Inclination

Adjust so that the image is projected to the screen without being slanted, then firmly tighten the four inclination adjustment screws. Lastly, tighten the two inclination axis screws if they are loose.

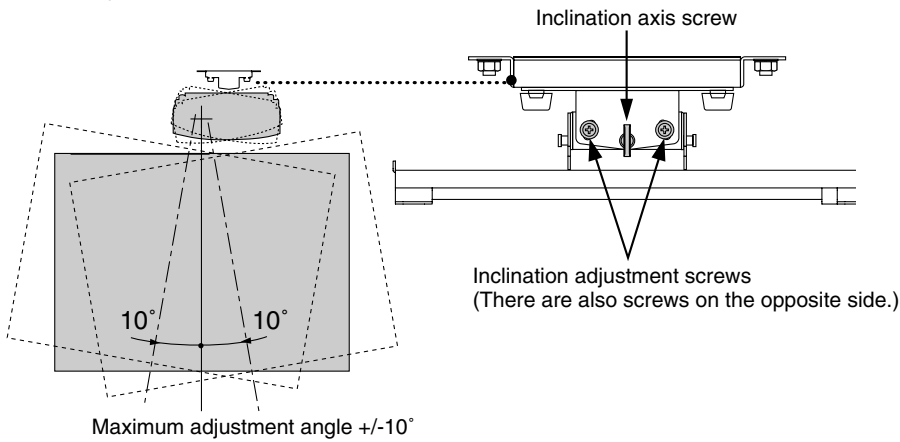

If the adjustment does not work out, readjust from Step *1*.

After the adjustments, check that the parts are fixed securely.

Specifications

Product Name	: Projector Ceiling Mount Unit
Model	: NP01CM
Adjustment angle	: Up-down angle +/-10˚
	Left-right angle +/-10˚
	Inclination angle +/-10˚
Dimensions	: 311 (W) x 253 (D) x 94.5 (H) mm (when assembled)
Weight	: Approximately 1.9 kg
Supplied Items	: Projector mounting screws (M4) 4
	Up-down angle adjustment screws (M5).....4
	Installation and adjustment manual 1

Specifications and design are subject to change without notice.