32"PD OUTLINE
Full spec.-with AV-unit

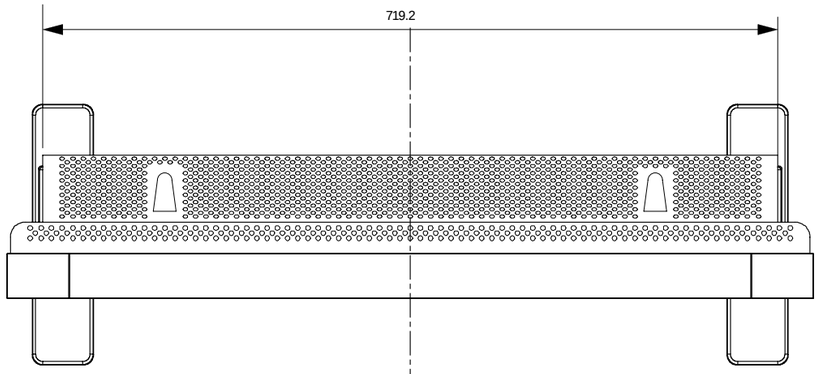

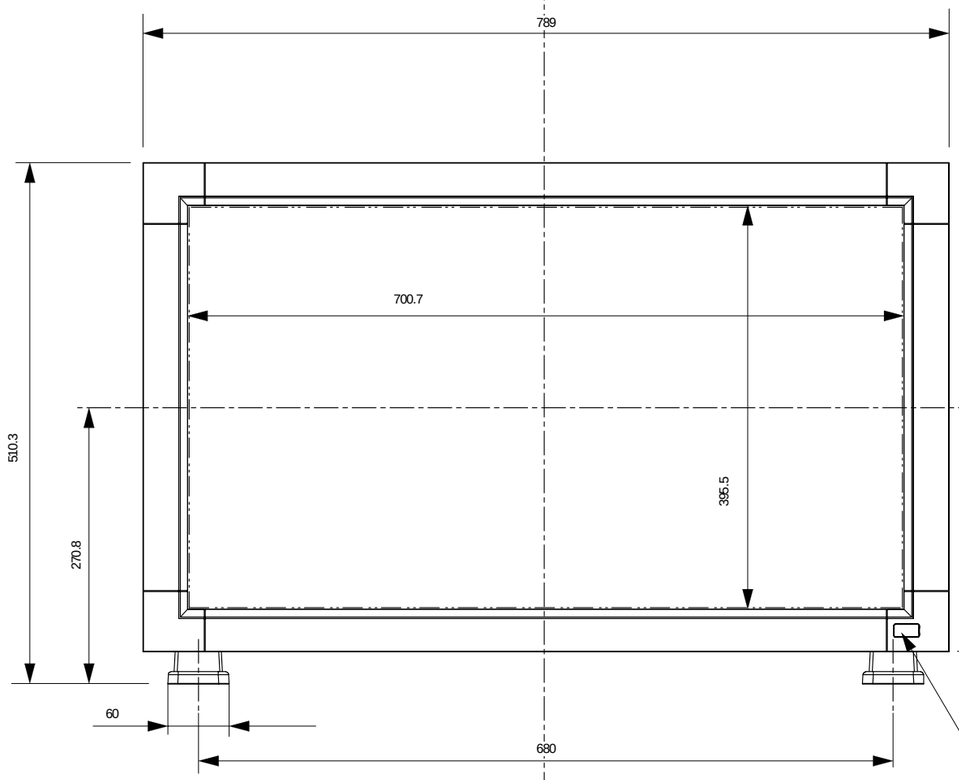

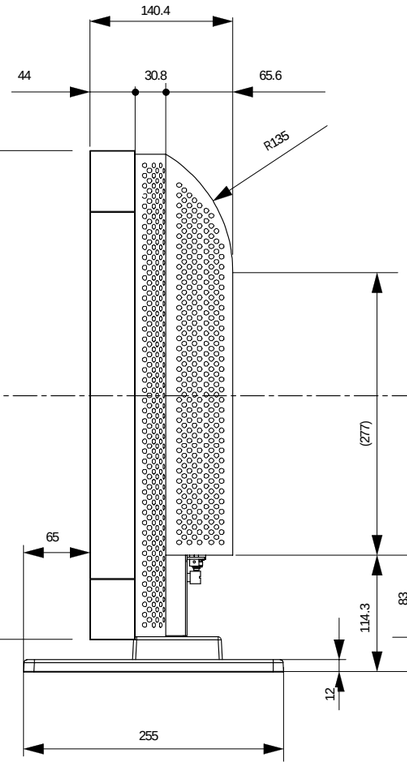

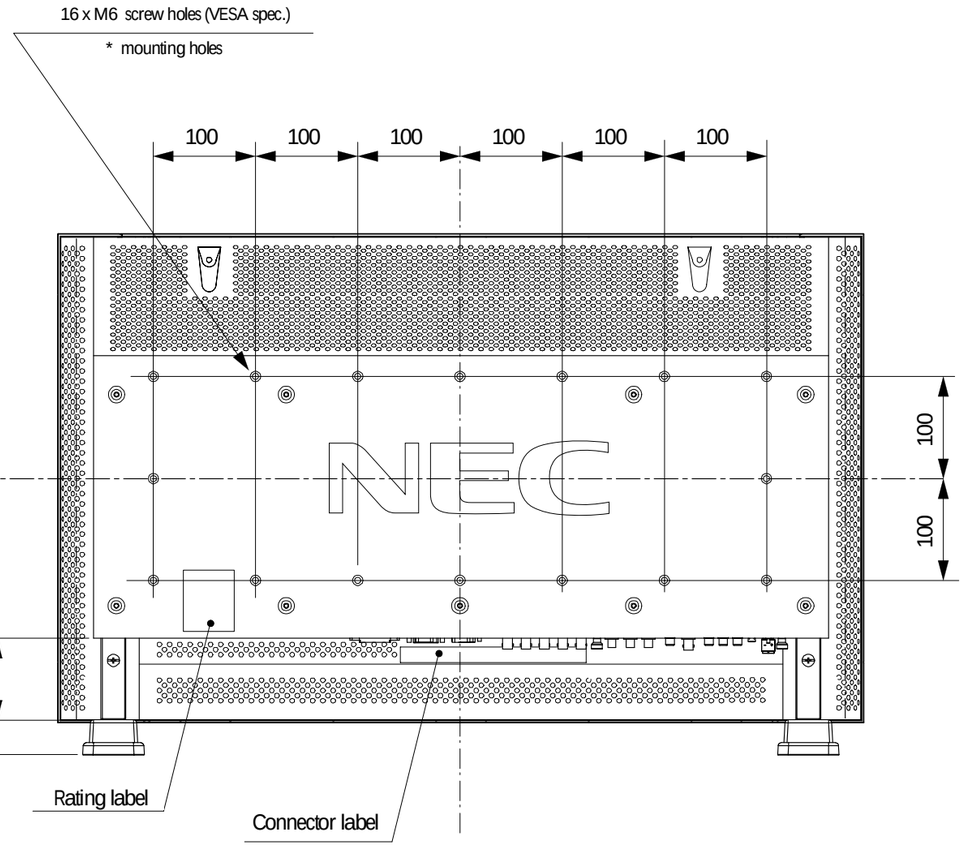

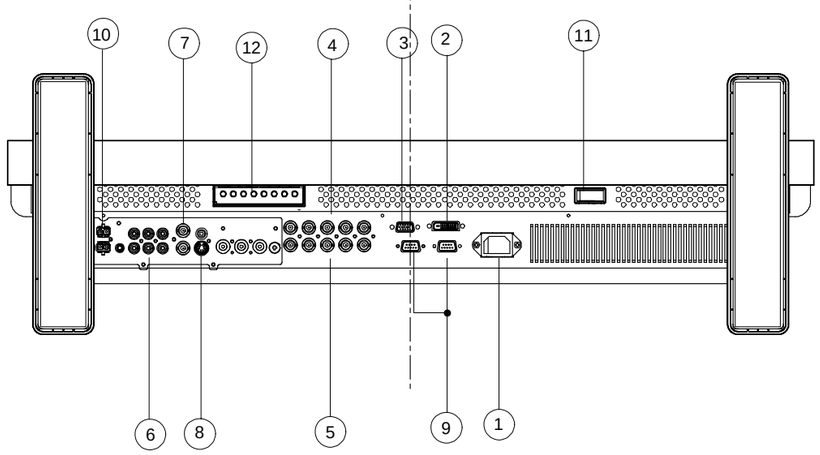

Remote control sensor and Power indicator

1. AC IN connector
2. RGB 1 IN DVI-D connector
3. RGB 2 IN mini D-sub 15pin connector
4. RGB 3DVD/HD BNC connector
5. RGB OUT BNC connector
6. AUDIO IN1,2,3 terminal
7. AUDIO OUT terminal
8. VIDEO terminal
   * VIDEO IN BNC and RCA connector
   * VIDEO OUT BNC connector
   * S-VIDEO IN DIN 4pin connector
9. EXTERNAL CONTROL mini D-Sub 9 pin for RS232 connector (IN and OUT)
10. EXTERNAL SPEAKER terninal
11. POWER SWITCH
12. OSM CONTROL SWITCH